LUMATEK
PROFESSIONAL LIGHTING

ZEUS 465W PRO 2.9

The Zeus 465W Pro 2.9 is a very high performance full-cycle LED solution for commercial and hobby horticulture cultivation, with the power and flexibility to scale from vegetative growth to higher light intensities in bloom. Designed for 1.2×1.2m coverage.

- up to **2.7** µmol/J
- **1353** µmol/s total output
- **Full-Spectrum**

Up to **2.9** µmol/J EFFICACY

1353 µmol/s PPF

DESIGNED & ENGINEERED BY LUMATEK IN THE UNITED KINGDOM

5 YEAR WARRANTY

CE · RoHS · WEEE · EMI SUPPRESSION & EMC CERTIFIED · LVD CERTIFIED · Plug & Play · IP65 · CONTROL TECHNOLOGY

ZEUS 465W PRO 2.9 LED

PRODUCT CODE: LUMLED011
EFFICACY: Up to 2.9 µmol/J
PPF: 1353 µmol/s
INPUT VOLTAGE: 220-240V, 50-60HZ
DRIVER: 465W 220-240V with Twist Lock Capability
INPUT POWER: 475W (±5%)
FOOTPRINT: 1.2x1.2m
APPLICATION: MULTI-LAYER, ROOM, TENT
WATERPROOF & DUSTPROOF: IP65
LIFETIME (LED BARS): 60 000 HRS
LIGHT DISTRIBUTION: 120°
LIGHT SOURCE: 4000K White Diodes Lumileds 3030 HE Plus; 660nm Red Diodes Osram SQ3.24
CCT: 3800K
QUANTITY OF LED BARS: 5
QUANTITY OF DIODES TOTAL: WHITE 1200; RED 100
QUANTITY OF DIODES PER LED BAR: WHITE 240; RED 20
DIODES POWER PROPORTION: WHITE 82%; RED 18%
DIODES EFFICIENCY: White Lumileds 3030 HE Plus 2.9 µmol/J; Red Osram SQ3.24 3.8 µmol/J
DIMMABLE: OFF-25%-50%-75%-100% with 0-10V Light Dimmer (Included)
EXTERNAL CONTROL: With Lumatek Digital Panel Plus 2.0 or Universal Controller 0-10V
WEIGHT: 10 Kg
DIMENSIONS: 998 x 900 x 51.9mm
SPECTRUM: Full Spectrum F
THERMAL MANAGEMENT: Passive Cooling
POWER FACTOR: 0.95
MAX. AMBIENT TEMPERATURE (@ 475W POWER): 25°C
BTU (WITH DRIVER ATTACHED): 1689 BTUs/h
BTU (WITHOUT DRIVER): 1571 BTUs/h
WARRANTY: 5 YEARS
CERTIFICATIONS:

IP65, Rohs Directive 2011/65/EU And (EU)2015/863)
LED Fixture: CE Safety Standard: EN 60598-1：2015+A1：2018, EN 60598-2-1：1989, EN 62031：2020, EN 62493：2015, EN 62471：2008; CE EMC Standard: EN 55015：2019, EN 61547：2009, EN 61000-3-2：2019, EN 61000-3-3：2013+A1：2019
LED Driver: : CE Safety Standard: EN 60598-1：2015+A1：2018, EN 60598-2-1：1989, EN 62031：2020, EN 62493：2015, EN 62471：2008; CE EMC Standard: EN 61347-1：2015, EN 61347-2-13：2014+A1：2017, EN 62493：2015

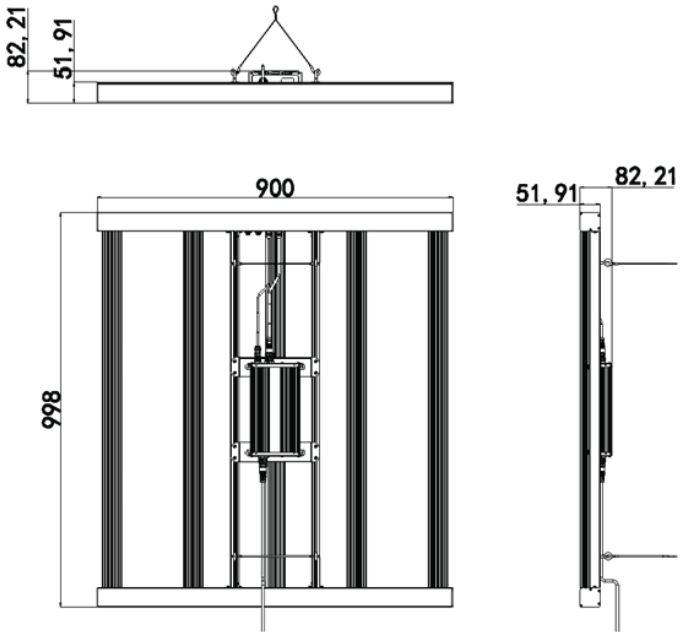

SQD SPECTRUM GRAPH

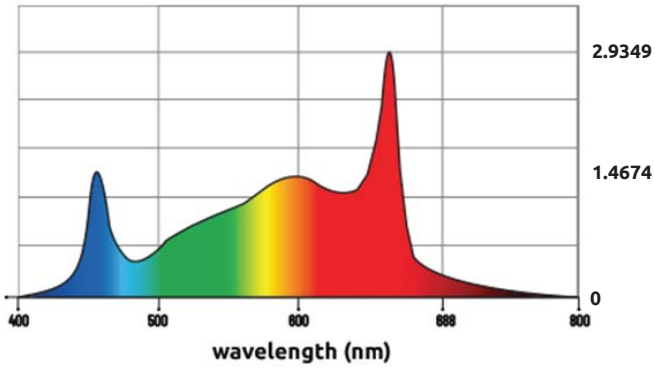

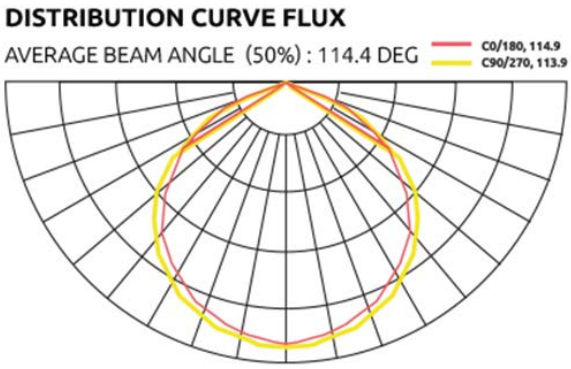

INPUT CURRENT **(A/W)** PER DIMMING RANGE		
@ 277V		
DIMMING	INPUT POWER (W)	INPUT CURRENT (A)
100%	495	1.85
75%	390	1.48
50%	249	9.99
25%	125	0.59
@ 240V		
DIMMING	INPUT POWER (W)	INPUT CURRENT (A)
100%	495	2.13
75%	392	1.69
50%	250	1.11
25%	126	0.64
@ 230V		
DIMMING	INPUT POWER (W)	INPUT CURRENT (A)
100%	495	2.23
75%	392	1.75
50%	251	1.14
25%	126	0.63

ITEMS INCLUDED IN THE BOX:

- **5 x Lumatek 93W Pro 2.9 Full-Spectrum Magnet Light Bars**
- **1 x Lumatek 465W Pro 2.9 Driver with Connecting Cables**
- **1 x 0-10V Light Dimmer + Velcro**
- **1 x LED Structure with Connecting Cables**
- **2 x Metal Cable Hangers**
- **1 x Manual**

EXTERNAL CONTROL

The Zeus fixture can also be externally controlled with a Lumatek digital lighting controller (Digital Panel Plus 2.0) featuring light timing, automated dimming (1% increments), temperature safety control, Sunrise & Sunset Mode for up to 100 fixtures per controller

PPFD: PHOTOSYNTHETIC PHOTON FLUX DENSITY (µmol/m2/s)

FACTORS THAT CAN INFLUENCE **PPFD TESTS**

- TEST EQUIPMENT.
- LAMP BEADS DEVIATION
- AMBIENT TEMPERATURE DEVIATION
- PC COVER TRANSMITTANCE DEVIATION
- POWER SOURCE EFFICIENCY DEVIATION
- REFLECTION CONSIDERED OR NOT

RECOMMENDED PPFD (µmol/m2/s)

PLANT	SEED	CLONES	VEGETATIVE	FLOWERING
CANNABIS	100-300	75-150	300-550	650+
TOMATOES	150-350	75-150	350-550	650+
CUCUMBERS	100-300	--	300-550	650+
PEPPERS	150-350	--	300-550	650+

LUMATEK ZEUS 465W PRO 2.9 **PPFD MAPS**

TEST AREA	**1.2m x 1.2m**
TEST POINTS	**64**
TEST EQUIPMENT	**Integrating 2 meter sphere & LI-COR 180**
AMBIENT TEMPERATURE	**25º**
HEIGHT FROM CANOPY	**30cm, 40cm, 50cm, 100cm**
REFLECTION	**0%**

HEIGHT TO TEST POINT **30cm**

CANOPY AVERAGE **PPFD** **758.42 µmol/s/m²**

414,5	628,2	746,5	746,7	729,6	705,8	613,2	456,6
528,8	706,8	866,9	881,5	865,8	829,5	697,4	554,5
579,3	823	973,7	1022	1016	937,6	806,4	611,3
635,4	834,5	999,1	1058	1048	980,8	802,6	631,1
622,8	823,2	998,3	1049	1037	971,8	813,5	618,7
613,7	842,3	953,7	991,4	969,5	923,5	788,1	609,1
527,9	728,1	849,2	854,3	865,6	795,6	670,4	533,2
325	528,3	590,4	702,5	648,3	594,1	539,3	430,1

1.2m

0.15m

1.2m

0.15m

HEIGHT TO TEST POINT **40cm**

CANOPY AVERAGE **PPFD** **709.7 µmol/s/m²**

501,4	642,9	697,2	715,1	703,3	684,7	602,8	516,2
584,9	673,1	767,2	788,8	781,7	733,1	650,8	597,8
614,5	621,5	744,4	875,2	933,9	926,7	852,5	734,6
635,3	761,1	867,5	930,3	927,9	861,3	725,8	641,2
636,7	753,5	885,6	925,1	917,3	845,6	715,6	620,9
629,8	726,7	817	870,9	867	813	694,4	586,9
536	633,2	721,6	764	759,6	711,5	613	544,9
475,4	521,6	643,9	676,1	656,7	597,3	507,3	460,1

1.2m

0.15m

1.2m

0.15m

HEIGHT TO TEST POINT **50cm**

CANOPY AVERAGE **PPFD** **666.6 µmol/s/m²**

528,9	617,9	661	679	655,9	645,8	596	518,5
610,7	656,6	724,1	732,1	743,5	668,2	624,3	572,3
623,5	691,6	779,6	811,7	821,4	758,3	675,9	611,7
648,3	709,5	797,8	839	842,3	789,6	679,9	609,7
621,8	703,6	781,8	834,3	834,4	762,5	680,9	601,3
610,3	664	740,3	781	779,2	742,6	657,5	578,8
537,8	605,5	676,5	706,4	689,4	613,7	541,6	525,2
457,4	529,8	620,7	662,2	633,9	572	521	467,9

1.2m

0.15m

1.2m

0.15m

HEIGHT TO TEST POINT **100cm**

CANOPY AVERAGE **PPFD** **593.1 µmol/s/m²**

480,7	515	507,9	495,6	499,5	500,6	505,5	487
522,2	524,5	529,2	544,8	544	533	523,9	505,4
516,4	534,7	557,8	570,3	572,7	557,3	536	507,4
500,1	539,1	567,6	583,2	585	571,1	533,5	593,1
497,1	527,2	557,1	573,9	576,5	565	534,4	501,4
499,7	525,8	551,4	566,1	567,5	542,9	531,8	507,3
452,2	495,8	522,5	536,5	536,4	533,3	505,6	467,4
421,3	469,7	505,9	515	516	482,1	477,2	459,7

1.2m

0.15m

1.2m

0.15m